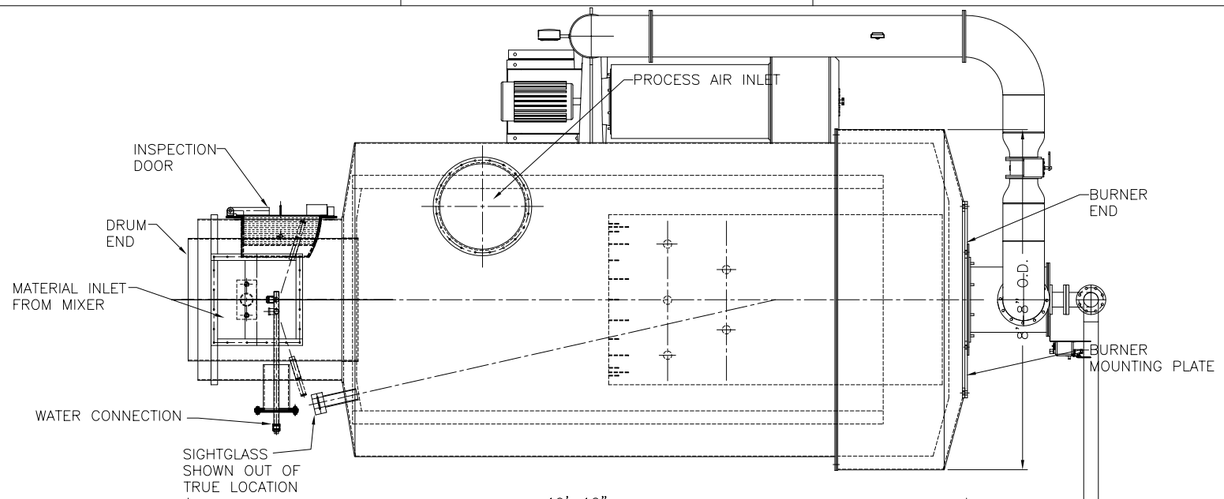

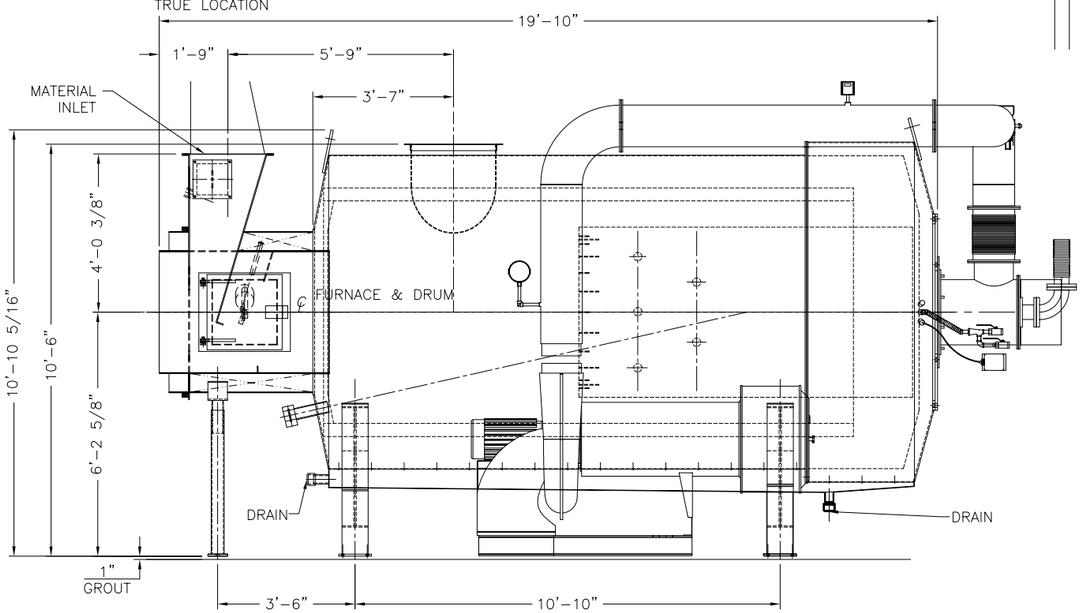

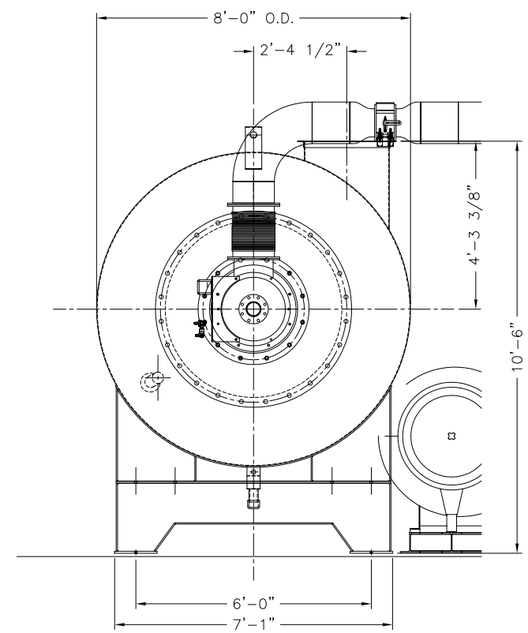

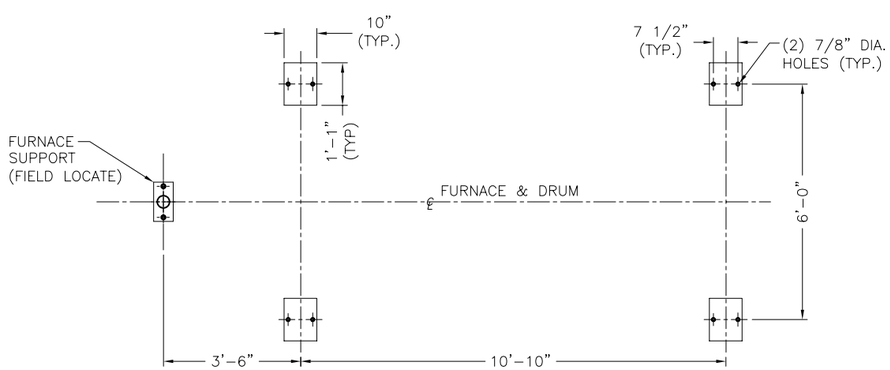

BASE PLATE PLAN VIEW

NOTE: FINAL LOCATION OF FURNACE TO BE ADJUSTED IN FIELD TO MATCH INSTALLED DRUM

THIS DRAWING IS COPY RIGHTED
THIS DRAWING IS A TRADE SECRET AND ONLY ENTRUSTED TO THE RECIEVER FOR HIS PERSONAL USE, WITHOUT THE SIGNED WRITTEN CONSENT OF ANDRITZ-RUTHNER, INC., IT MUST NOT BE COPIED NOR MADE AVAILABLE TO THIRD PARTIES, INCLUDING COMPETITORS, NOR MADE ACCESSIBLE TO SUCH PARTIES. ANY ILLEGAL USE BY THE RECIEVER OR THIRD PARTIES FOR WHICH HE IS RESPONSIBLE CAN CONSTITUTE A CAUSE FOR LEGAL ACTION. THIS DRAWING MUST BE RETURNED ON REQUEST OF THE COMPANY.

NOTES:

1. MATERIALS

STRUCTURAL SUPPORTS	A36
FLAME TUBE	ASTM 316L-SS
OUTER SHELL	ASTM A36
INNER CYLINDER	304-SS

2. ALL STRUCTURAL STEEL TO BE A36 PER AISC STANDARDS UNLESS OTHERWISE NOTED.
3. ALL WELDED CONSTRUCTION UNLESS NOTED OTHERWISE. WELDING PER AWS STANDARDS.
4. BOLTED STRUCTURAL CONNECTIONS TO BE ASTM A-325 UNLESS OTHERWISE NOTED.
5. FURNACE SHALL BE RETRACTORY LINED AND COMPLY TO APPLICABLE PARTS OF NFPA 86 AND NFPA 654.
6. THE BURNER VALVE TRAIN AND BURNER CONTROLS SHALL MEET OR EXCEED THE APPLICABLE REQUIREMTNS OF IRI, NEC, FM, NFPA AND ASME.
7. FABRICATOR TO SUPPLY ALL FASTENERS INCLUDING BOLTS, NUTS, FLAT AND LOCK WASHERS, GRATING CLIPS, HIGH TEMPERATURE GASKETS, AND ALL OTHER MISCELLANEOUS HARDWARE.
8. THE BURNER SHALL BE A LOW NOx CAST HOUSING TYPE.
9. ALL STRUCTURAL AND SEAM WELDS TO BE FULL PENETRATION UNLESS NOTED OTHERWISE. ALL REMAINING WELDS TO BE 3/16" CONTINUOUS FILLET UNLESS NOTED OTHERWISE.
10. FINISHING REQUIREMENTS:
    EXTERIOR SURFACES ONLY.
    SURFACE PREPARATION - DRY ABRASIVE NEAR WHITE BLAST PER SSPC-SP10. -ANCHOR PROFILE: 1– 2 MILS
    PRIME/FINISH COAT –SPRAY APPLY TWO COATS SHERWIN WILLIAMS KEM HI-TEMP NO. 850 SERIES, DRY FILM THICKNESS OF 1 TO 1.2 MILS PER COAT, TOTAL DFT OF 2 TO 2.4 MILS, COLOR OF SILVER
11. STEEL FABRICATORS TO TAG AL COMPONENTS (BEFORE SHIPPING) FOR ASSEMBLY. PROVIDE ONE EXTRA COPY OF INSTALLATION INSTRUCTIONS WITH SHIPMENT.

EQUIPMENT SPECIFICATIONS

MANUFACTURER	ANDRITZ
MODEL	DDS 40
CAPACITY	17.1 MMBTUH
PROCESS AIR FLOW	16,900 SCFM
PROCESS AIR TEMP	F OUTLET TEMP.
QUENCH WATER	70 GPM
MAX WEIGHT	39,500 LBS

TAG: EQ'T. No. 40-001-000

ANDRITZ
ANDRITZ-RUTHNER, INC.
1010 COMMERCIAL BLVD. SOUTH
ARLINGTON, TEXAS 76001
(817) 465-5611

STATE OF CONNECTICUT • PROFESSIONAL ENGINEER • WILLIAM F. FOLLMER • FOR 23800

REV	REVISION	DATE
1	UPDATE LAYOUT	01/16/07
0	FOR FINAL REVIEW/BUILDING PERMIT	06/05/06

DRAWN BY: UT DATE: 8/3/06
CHECKED BY: DATE:
APPROVED BY: DATE:
SCALE: 1/2"=1'-0" FILE 152400100
SIZE DDS40

JOB NAME: CITY OF STAMFORD CONNECTICUT SOLIDS DRYING PROJECT

TITLE: FURNACE (001) GENERAL ARRENGMENT

PROJECT NUMBER 1524
DRAWING NUMBER 001-00 REV 1
SHEET 1 OF 1