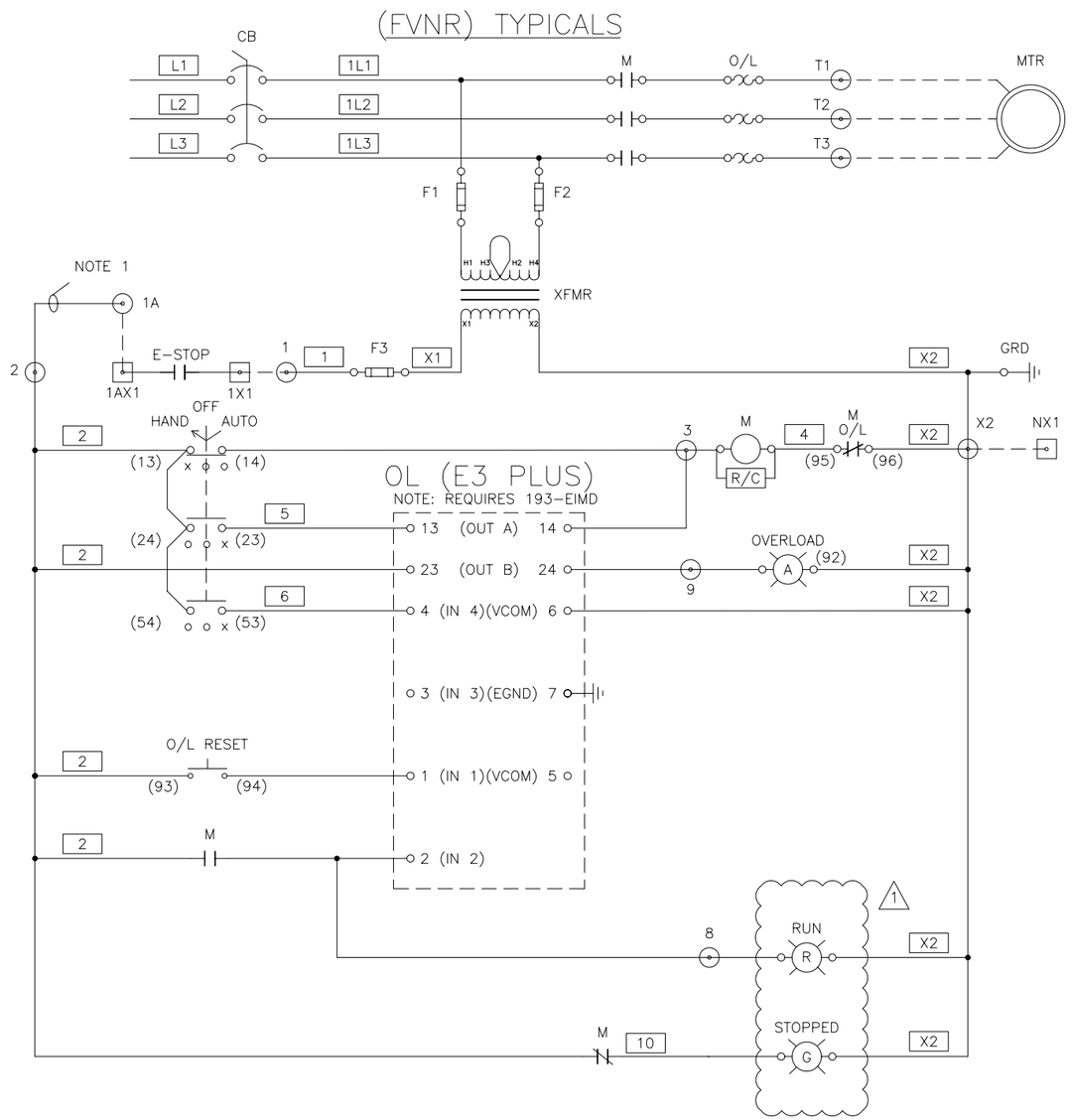

NOTES:

1) REMOVE JUMPER FOR ADDITIONAL INTERLOCKS (i.e. PULL CORD EMERGENCY STOP)

TYPICAL FOR:

M-2.1.1 DRUM DRIVE

THIS DRAWING IS COPY RIGHTED
THIS DRAWING IS A TRADE SECRET AND ONLY ENTRUSTED TO THE RECIEVER FOR HIS PERSONAL USE. WITHOUT THE SIGNED WRITTEN CONSENT OF ANDRITZ-RUTHNER, INC., IT MUST NOT BE COPIED NOR MADE AVAILABLE TO THIRD PARTIES, INCLUDING COMPETITORS, NOR MADE ACCESSIBLE TO SUCH PARTIES. ANY ILLEGAL USE BY THE RECIEVER OR THIRD PARTIES FOR WHICH HE IS RESPONSIBLE CAN CONSTITUTE A CAUSE FOR LEGAL ACTION. THIS DRAWING MUST BE RETURNED ON REQUEST OF THE COMPANY.

RELEASED 12/08/06
REVISION - 1

ANDRITZ
ANDRITZ-RUTHNER, INC.
1010 COMMERCIAL BLVD. SOUTH
ARLINGTON, TEXAS 76001
(817) 465-5611

STATE OF CONNECTICUT • PROFESSIONAL ENGINEER • WILLIAM F. POLLOCK • FOR 23800

REV	REVISION	DATE
1	CHANGED LAMP COLOR (EIR28)	10/17/06
0	FOR FINAL REVIEW/BUILDING PERMIT	06/05/06

DRAWN BY: SSD DATE: 12/27/05
CHECKED BY: DATE:
APPROVED BY: DATE:
SCALE: NONE FILE 1524EP611
SIZE DDS40

JOB NAME: CITY OF STAMFORD CONNECTICUT SOLIDS DRYING PROJECT

TITLE: TYPICAL BUCKET MOTOR STARTER WIRING DIAGRAM

PROJECT NUMBER 1524
DRAWING NUMBER EP-611 REV 1
SHEET 1 OF 1